Diesel Generator Set

mtu 16V4000 DS2500

380V – 11 kV/50 Hz/prime power for stationary emergency/ NOx emission optimized/16V4000G24F/water charge air cooling

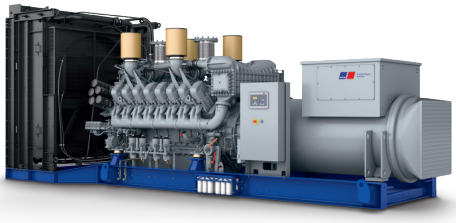

VDE-AR-N 4110 CERTIFIED GERMAN GRID CODE

Optional equipment and finishing shown. Standard may vary.

Product highlights

Benefits
- Approved for renewable fuels (e.g. HVO)
- Low fuel consumption
- Optimized system integration ability
- High reliability
- High availability of power
- Long maintenance intervals

Support
- Global product support offered

Standards
- Engine-generator set is designed and manufactured in facilities certified to standards ISO 2008:9001 and ISO 2004:14001
- Generator set complies to ISO 8528
- Generator meets EC 60034-1, ISO 8528-3; IEC 60044-1; Declaration of conformity; EN55011, group 1, cl. B
- NFPA 110*

Power rating
- System ratings: 2350 kVA - 2360 kVA
- Accepts rated load in one step per NFPA 110*
- Generator set complies to G3 according to ISO 8528-5
- Generator set exceeds load steps according to ISO 8528-5*

Performance assurance certification (PAC)
- Engine-generator set tested to ISO 8528-5 for transient response
- 85% load factor
- Verified product design, quality and performance integrity
- All engine systems are prototype and factory tested

Complete range of accessories available
- Control panel
- Power panel
- Circuit breaker/power distribution
- Fuel system
- Fuel connections with shut-off valve mounted to base frame
- Starting/charging system
- Exhaust system
- Mechanical and electrical driven radiators
- Medium and oversized voltage alternators

Emissions
- NOx emission optimized

Certifications
- CE certification option
- Unit certificate acc. to VDE-AR-N 4110

* Changes to the standard parameter sets (alternator-regulator and genset-controller) are necessary

A Rolls-Royce solution

Application data [1)]

Engine

Manufacturer	***mtu***
Model	16V4000G24F
Type	4-cycle
Arrangement	16V
Displacement: l	76.3
Bore: mm	170
Stroke: mm	210
Compression ratio	16.4
Rated speed: rpm	1500
Engine governor	ECU 9
Max power: kWm	1965
Air cleaner	dry

Fuel system

Fuel specification	EN 590, Grade No.1-D/2-D (ASTM D975-00), EN 15940 (e.g. HVO)
Maximum fuel lift: m	5
Total fuel flow: l/min	20

Fuel consumption [2)]

	l/hr	g/kwh
At 100% of power rating:	516.1	218
At 75% of power rating:	378.2	213
At 50% of power rating:	252.1	213

Liquid capacity (lubrication)

Total oil system capacity: l	300
Engine jacket water capacity: l	175
Intercooler coolant capacity: l	50

Combustion air requirements

Combustion air volume: m^3/s	3.3
Max. air intake restriction: mbar	50

Cooling/radiator system

Coolant flow rate (HT circuit): m^3/hr	68.5
Coolant flow rate (LT circuit): m^3/hr	30
Heat rejection to coolant: kW	830
Heat radiated to charge air cooling: kW	500
Heat radiated to ambient: kW	90
Fan power for electr. radiator (40°C): kW	70

Exhaust system

Exhaust gas temp. (after turbocharger): °C	495
Exhaust gas volume: m^3/s	7.9
Maximum allowable back pressure: mbar	85
Minimum allowable back pressure: mbar	30

Standard and optional features

System ratings (kW/kVA)

Generator model	Voltage	NOx emission optimized					
		without radiator			with mechanical radiator		
		kWel	kVA*	AMPS	kWel	kVA*	AMPS
Leroy Somer LSA52.3 L12 (Low voltage Leroy Somer standard)	380 V	1888	2360	3586	1816	2270	3449
	400 V	1888	2360	3406	1816	2270	3276
	415 V	1888	2360	3283	1816	2270	3158
Leroy Somer LSA53.2 XL11 (Med. volt. Leroy Somer)	11 kV	1880	2350	123	1816	2270	119

* cos phi = 0.8

1 All data refers only to the engine and is based on ISO standard conditions (25°C and 100m above sea level).

2 Values referenced are in accordance with ISO 3046-1. Conversion calculated with fuel density of 0.83 g/ml. All fuel consumption values refer to rated engine power.

Standard and optional features

Engine

- ■ 4-cycle
- ■ Standard single stage air filter
- ■ Oil drain extension & shut-off valve
- ■ Closed crankcase ventilation
- ■ Governor-electronic isochronous
- ■ Common rail fuel injection
- ■ NOx emission optimized engine

Generator

- ■ 4 pole three-phase synchronous generator
- ■ Brushless, self-excited, self-regulating, self-ventilated
- ■ Digital voltage regulator
- ■ Anti condensation heater
- ■ Stator winding Y-connected, accessible neutral (brought out)
- ■ Protection IP23
- ■ Insulation class H, utilization acc. to H
- ■ Radio suppression EN 55011, group 1, cl. B
- ■ Short circuit capability 3xIn for 10sec
- ■ Winding and bearing RTDs (without monitoring)
- ■ Excitation by AREP
- ■ Mounting of CT´s: 2 core CT´s
- ■ Winding pitch: 2/3 winding
- ■ Voltage setpoint adjustment ± 10%
- ■ Meets NEMA MG-1, BS 5000, IEC 60034-1, VDE 0530, DIN EN 12601, AS 1359 and ISO 8528-3 requirements
- ■ Leroy Somer low voltage generator
- ☐ Oversized generator
- ☐ Medium voltage generator
- ☐ Excitation by PMG, subtransient reactance X”d: Saturated <12%

Oil system

- ☐ Automatic oil refilling system
- ☐ Extended test run kit (including pre-lubrication pump)

Cooling system

- ■ Jacket water pump
- ■ Thermostat(s)
- ■ Water charge air cooling
- ☐ Mechanical radiator
- ☐ Electrical driven front-end cooler
- ☐ Jacket water heater
- ☐ Jacket water heater with plate heat exchanger
- ☐ Pulley for fan drive

Control panel

- ■ Unit cabling with coded plugs for easy connection of customer-specific controls (V0)
- ☐ Pre-wired control cabinet for easy application of customized controller (V1+)
- ☐ Island operation (V2)
- ☐ Automatic mains failure operation with ATS (V3a)
- ☐ Automatic mains failure operation incl. control of generator and mains breaker (V3b)
- ☐ Island parallel operation of multiple gensets (V4)
- ☐ Automatic mains failure operation with short (< 10s) mains parallel overlap synchronization (V5)
- ☐ Mains parallel operation of a single genset (V6)
- ☐ Mains parallel operation of multiple gensets (V7)
- ☐ Basler controller
- ☐ Deif controller
- ☐ Complete system metering
- ■ Digital metering
- ■ Engine parameters
- ■ Generator protection functions
- ■ Engine protection
- ■ SAE J1939 engine ECU communications
- ■ Parametrization software
- ■ Multilingual capability
- ■ Multiple programmable contact inputs
- ■ Multiple contact outputs
- ■ Event recording
- ☐ IP 54 front panel rating with integrated gasket
- ☐ Different expansion modules
- ☐ Remote annunciator
- ☐ Daytank control
- ☐ Generator winding temperature monitoring
- ☐ Generator bearing temperature monitoring
- ☐ Modbus TCP-IP

■ Represents standard features

☐ Represents optional features

Standard and optional features

Connectivity

The engine system automatically collects and transfers engine data to the manufacturer from time to time. The data is used by the manufacturer for the purposes of product development and improvement as well as service optimization.

Users can log in or register via https://mtu-go.com and also gain insight into the data.

Power panel

- ☐ Supply electrical driven radiator from 45kW – 75kW

Circuit breaker/power distribution

- ☐ 3-pole circuit breaker
- ☐ 4-pole circuit breaker
- ☐ Electrical-actuated circuit breaker
- ☐ Base frame mounted GCB, pre-wired with generator, ready for commissioning

Fuel system

- ■ Flexible fuel connectors mounted to base frame
- ☐ Fuel filter with water separator
- ☐ Fuel filter with water separator heavy-duty
- ☐ Switchable fuel filter with water separator
- ☐ Switchable fuel filter with water separator heavy-duty
- ☐ Seperate fuel cooler
- ☐ Fuel cooler integrated into cooling equipment

Starting/charging system

- ■ 24V starter
- ☐ Redundant starting system
- ☐ Starter batteries, cables, rack, disconnect switch (lockable)
- ☐ Battery charger
- ☐ Alternator

Mounting system

- ■ Welded base frame
- ■ Resilient engine and generator mounting
- ■ Modular base frame design
- ☐ Base frame mounting on foundation/base plate with using clamping brackets
- ☐ Spring mounts with 95% degree of isolation

Exhaust system

- ☐ Exhaust bellows with connection flange
- ☐ Exhaust silencer with 10 dB(A) sound attenuation
- ☐ Exhaust silencer with 30 dB(A) sound attenuation
- ☐ Exhaust silencer with 40 dB(A) sound attenuation
- ☐ Y-connection-pipe

■ Represents standard features
☐ Represents optional features

Weights and dimensions

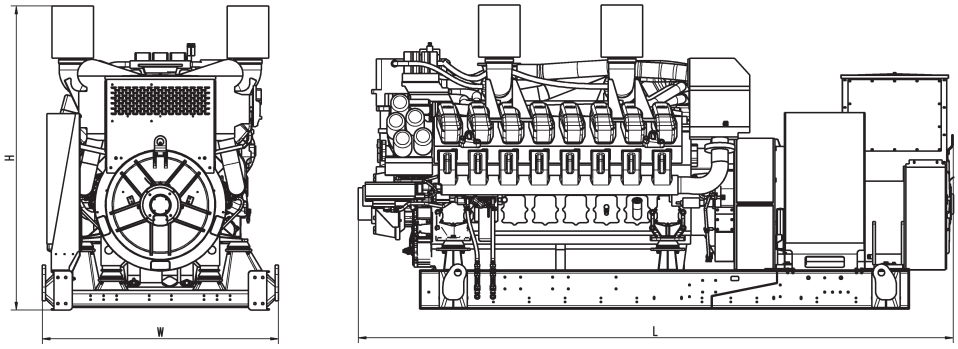

Drawing above for illustration purposes only, based on a standard open power 400 Volt engine-generator set. Lengths may vary with other voltages. Do not use for installation design. See website for unit specific template drawings.

System	Dimensions (LxWxH)	Weight (dry/less tank)
Open power unit (OPU)	4766 x 1810 x 2330 mm	13395 kg

Weights and dimensions are based on open power units and are estimates only. Consult the factory for accurate weights and dimensions for your specific engine-generator set.

Sound data

— Consult your local ***mtu*** distributor for sound data.

Emissions data

— Consult your local ***mtu*** distributor for emissions data.

Rating definitions and conditions

— Standby ratings apply to installations served by a reliable utility source. The standby rating is applicable to varying loads for the duration of a power outage. A 10% overload capacity is available for one hour in twelve. Ratings are in accordance with ISO 8528-1, ISO-3046-1, BS 5514 and AS 2789. Average load factor: ≤ 85%. Operating hours/year: max. 500.
— Consult your local ***mtu*** distributor for derating information.

Subject to change. | 3238821 | Edition 01/24 | BMC 2024-05.